Compact Type 3610

- Low price, compact, high performance
- Chromated housing resistant to cooling lubricants and other environmental influences
- Universal application in mechanical engineering, vehicles, conveyors and elevators
- Wide temperature range (-30 … +90 °C)
- Temperature and ageing compensation
- Low current consumption despite high scanning rate
- IP 65 from housing side
- Sturdy cable entry thanks to multiple clamping
- Highly flexible cable (withstands constant flexing at 0 °C … 70 °C)
- Short circuit proof
- Broad input voltage range (5 … 18 V or 8 … 30 V)

Mechanical characteristics:

Speed:	max. 12000 min^{-1}
Rotors moment of inertia:	ca. 0,2 x 10^{-6} kgm^2
Starting torque:	< 0,05 Nm
Radial load capacity of the shaft:	40 N
Axial load capacity of the shaft:	20 N
Weight:	ca. 0,08 kg
Protection acc. to EN 60 529:	IP 65, housing side
Working temperature:	–20° C ... +85 °C
Operating temperature:	–30 °C ... +90 °C
Materials:	Shaft: stainless steel; Housing: Alu Cable: PVC
Shock resistance acc. to DIN-IEC 68-2-27:	1000 m/s^2, 6 ms
Vibration resistance acc. to DIN-IEC 68-2-6:	100 m/s^2, 55 ... 2000 Hz

Pulse rates available at short notice:

25, 100, 200, 360, 500, 600, 1000, 1024, 1500, 2000, 2048, 2500, 3600

Other pulse rates available on request

Electrical characteristics:

Output circuit:	Push-pull	Push-pull
Supply voltage:	5 ... 18 V DC	8 ... 30 V DC
Power consumption (no load) with inverted signal:	< 40 mA	< 40 mA
Permissible load/channel:	max. ±50 mA	max. ±50 mA
Pulse frequency:	max. 200 kHz	max. 200 kHz
Signal level high:	min. UB - 2,5 V	min. UB - 3 V
Signal level low:	max. 0,5 V	max. 2,5 V
Rise time tr	max. 1 µs	max. 1 µs
Fall time tf	max. 1 µs	max. 1 µs
Short circuit proof outputs[1]:	yes[1]	yes[1]
Reverse connection protection at U_B:	yes	yes
Conforms to CE requirements acc. to EN 50082-2, EN 50081-2 and EN 55011 Class B		

[1] When supply voltage correctly applied

Compact Type 3610

Terminal assignment:

Signal:	0 V	+U_B	A	$\overline{A}$	B	$\overline{B}$	0	$\overline{0}$	Schirm
Col.:	WH	BN	GN	YE	GY	PK	BU	RD	

Insulate unused outputs before initial startup.

Dimension:
Synchronous flange

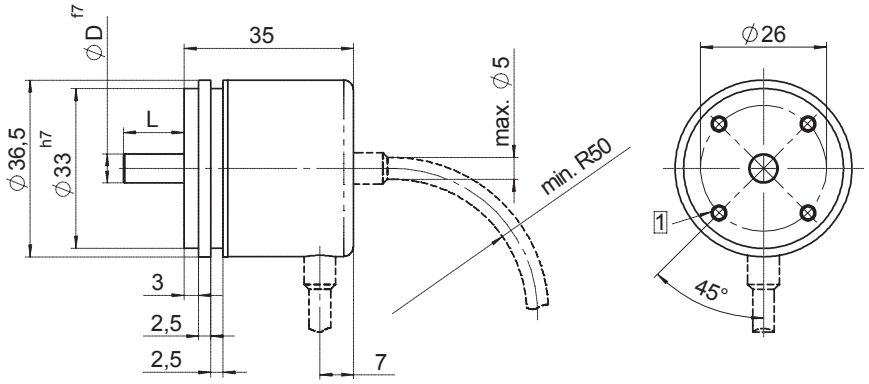

Clamping flange

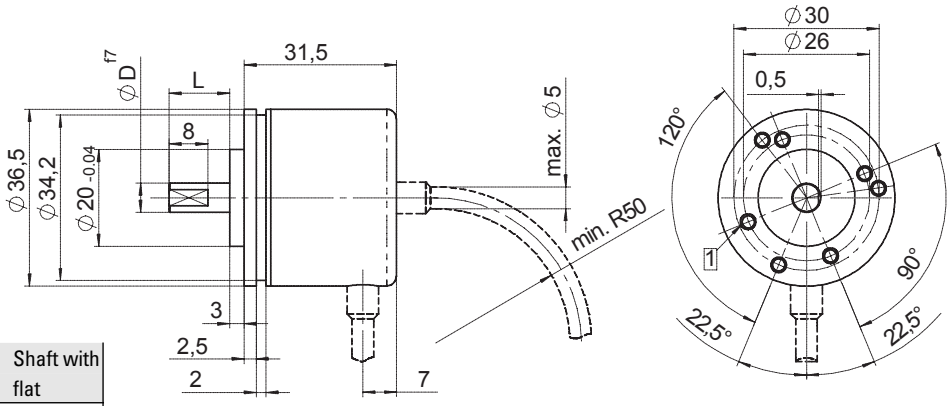

Order-Code Shaft	D	L	Shaft with flat
1	ø 4	10	no
2	ø 5	10	no
3	ø 6	12,5	yes
5	ø 1/4"	12,5	yes

1 M3, 5 deep

Order code

8.3610.XXXX.XXXX

Type series

Flange
- 2 = Synchronous flange
- 3 = Clamping flange

Shaft
- 1 = ø 4 mm
- 2 = ø 5 mm
- 3 = ø 6 mm x 12,5 mm
- 5 = ø 1/4" x 12,5 mm

Pulse rate
(e.g. 500 pulses => 0500)

Type of connection
- 1 = cable axial (2 m PVC cabel)
- 2 = cable radial (2 m PVC cabel)

Output and voltage supply
- 2= Push-pull with inverted singals 5 ... 18 V DC Power supply
- 3 = Push-pull without inverted signals 8 ... 30 V DC Power supply
- 4 = Push-pull with inverted singals 8 ... 30 V DC Power supply